EANCOM® 2002 S4

COMDIS

Commercial dispute message

Edition 2016

1. Introduction 2
2. Message Structure Chart 3
3. Branching Diagram 4
4. Segments Description 7
5. Segments Layout 9
6. Example(s) 33

1. Introduction

Status

MESSAGE TYPE	: COMDIS
REFERENCE DIRECTORY	: D.01B
EANCOM® SUBSET VERSION	: 003

Definition

A notice of commercial dispute against one or more INVOIC messages (e.g. commercial invoice, credit note, etc.) which is usually raised by the buyer to notify the supplier that something was found wrong with an INVOIC message which detailed goods delivered or the services rendered (incorrect price, incorrect product identification, no proof of delivery, etc.).

Principles

The buyer may use the message to supply the following information:

- Non-acceptance of the INVOIC message, with a mandatory indication of error(s) providing the reason for non-acceptance and an indication of the corrections to be made.
- Acceptance of the INVOIC message and, if necessary, an indication of error(s) and an indication of the corrections to be made.

If the INVOIC message has not been accepted by the buyer, the supplier may agree and submit an INVOIC message to cancel the first one followed by an INVOIC message.

The way in which companies agree to deal with errors on INVOIC messages may be documented in an Interchange Agreement and may be subject to local tax regulations.

2. Message Structure Chart

Commercial Dispute Heading Section

UNH	1	M	1	- Message header
BGM	2	M	1	- Beginning of message
RFF	3	C	9	- Reference
DTM	4	C	9	- Date/time/period
SG1		C	99	- NAD-CTA-COM
NAD	5	M	1	- Name and address
CTA	6	C	1	- Contact information
COM	7	C	5	- Communication contact

Commercial Dispute Detail Section

SG2		C	9999	- DOC-DTM-MOA-SG3-SG4-SG5
DOC	8	M	1	- Document/message details
DTM	9	C	9	- Date/time/period
MOA	10	C	2	- Monetary amount
SG3		C	9	- AJT-FTX
AJT	11	M	1	- Adjustment details
FTX	12	C	9	- Free text
SG4		C	9	- INP-FTX
INP	13	M	1	- Parties and instruction
FTX	14	C	9	- Free text
SG5		C	9999	- DLI-MOA-SG6
DLI	15	M	1	- Document line identification
MOA	16	C	2	- Monetary amount
SG6		C	9	- AJT-FTX
AJT	17	M	1	- Adjustment details
FTX	18	C	9	- Free text

Commercial Dispute Summary Section

UNT	19	M	1	- Message trailer

3. Branching Diagram

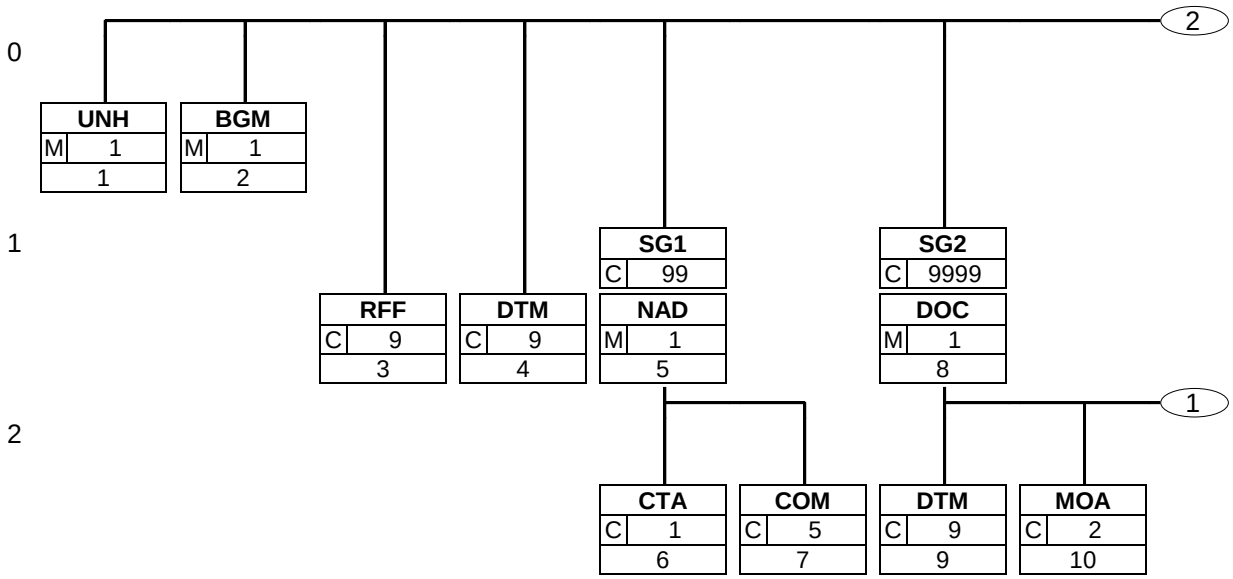

3. Branching Diagram

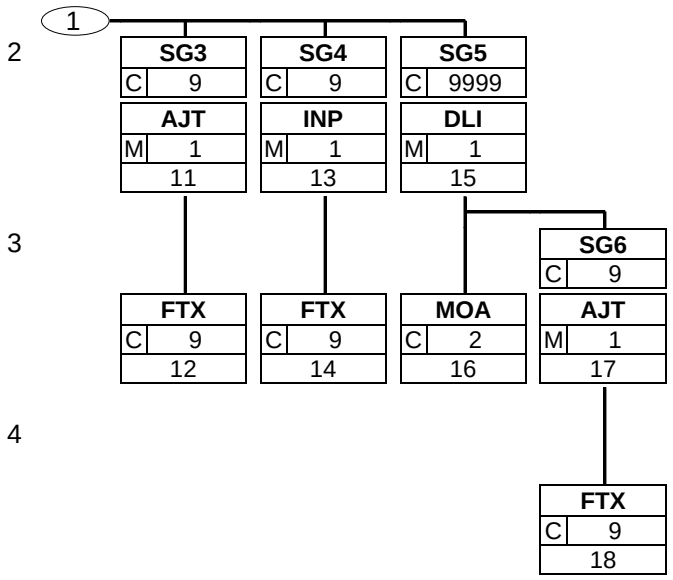

3. Branching Diagram

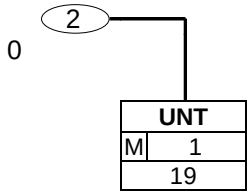

4. Segments Description

Commercial Dispute Heading Section

UNH - M 1 - Message header

This segment is used to head, identify and specify a message.

BGM - M 1 - Beginning of message

This segment is used to indicate the type and function of a message and to transmit the identifying number.

RFF - C 9 - Reference

This segment is used only to refer to a previously sent Commercial Dispute message when code values 1 or 5 are used in data element 1225 of the BGM segment.

DTM - C 9 - Date/time/period

This segment is used to specify the date of the commercial dispute.

SG1 - C 99 - **NAD-CTA-COM**

A group of segments identifying the name and address of the parties involved in the transaction and their contacts.

NAD - M 1 - Name and address

This segment is used to identify the trading parties involved in the commercial dispute. Identification of the sender and receiver of the message is mandatory.

CTA - C 1 - Contact information

This segment is used to identify contact names within the party specified in the NAD segment.

COM - C 5 - Communication contact

This segment is used to identify the communications number and method of communications, for the party identified in the NAD segment.

Commercial Dispute Detail Section

SG2 - C 9999 - **DOC-DTM-MOA-SG3-SG4-SG5**

A segment group providing details of all documents, e.g. invoices, etc. to which the commercial dispute refers. It includes information on the monetary amounts for each document and on any adjustments (with an indication of the reason for adjustments) and on actions (to be) taken by the parties who are involved.

DOC - M 1 - Document/message details

This segment is used to identify the document which is the subject of the commercial dispute. The detail section of the Commercial Dispute is formed by a repeating groups of DOC segments.

DTM - C 9 - Date/time/period

This segment is used to indicate the date of the document identified in the DOC segment.

MOA - C 2 - Monetary amount

This segment is used to provide monetary values related to the document specified in the DOC segment.

SG3 - C 9 - **AJT-FTX**

A group of segments to indicate the reasons of the dispute, with coded and free text information, related to the reference document.

AJT - M 1 - Adjustment details

This segment is used to indicate the reason for an adjustment to the current document.

4. Segments Description

FTX	- C	9	- Free text This segment is used to provide any free text information related to the adjustment detailed in the AJT segment.
SG4	- C	9	- **INP-FTX** A group of segments indicating the actions to be taken and the actions taken.
INP	- M	1	- Parties and instruction This segment is used to identify the party who must carry out an instruction from the message sender.
FTX	- C	9	- Free text This segment is used to provide any free text instructions which must be carried out by the party receiving the message.
SG5	- C	9999	- **DLI-MOA-SG6** A group of segments which may be used when required to provide details of individual line items in the reference document.
DLI	- M	1	- Document line identification This segment is used to identify individual line items within the document identified in the DOC segment.
MOA	- C	2	- Monetary amount This segment is used to indicate the amounts which are relevant to the line item identified in the DLI segment.
SG6	- C	9	- **AJT-FTX** A group of segments to indicate the reasons of the dispute, with coded and free text information, related to the reference line item.
AJT	- M	1	- Adjustment details This segment is used to indicate the reason for an adjustment to the line identified in the DLI segment. The line number of the line for which adjustments are being detailed was provided in DE 1082 of the DLI segment.
FTX	- C	9	- Free text This segment is used to provide any free text information related to the adjustment detailed in the AJT segment.

<u>Commercial Dispute Summary Section</u>

UNT	- M	1	- Message trailer This segment is a mandatory UN/EDIFACT segment. It must always be the last segment in the message.

5. Segments Layout

This section describes each segment used in the EANCOM® Commercial dispute message. The original EDIFACT segment layout is listed. The appropriate comments relevant to the EANCOM® subset are indicated.

Notes:

1. The segments are presented in the sequence in which they appear in the message. The segment or segment group tag is followed by the (M)andatory / (C)onditional indicator, the maximum number of occurrences and the segment description.

2. Reading from left to right, in column one, the data element tags and descriptions are shown, followed by in the second column the EDIFACT status (M or C), the field format, and the picture of the data elements. These first pieces of information constitute the original EDIFACT segment layout.

   Following the EDIFACT information, EANCOM® specific information is provided in the third, fourth, and fifth columns. In the third column a status indicator for the use of (C)onditional EDIFACT data elements (see 2.1 through 2.3 below), in the fourth column the restricted indicator (see point 3 on the following page), and in the fifth column notes and code values used for specific data elements in the message.

2.1 (M)andatory data elements in EDIFACT segments retain their status in EANCOM®.

2.2 Additionally, there are five types of status for data elements with a (C)onditional EDIFACT status, whether for simple, component or composite data elements. These are listed below and can be identified when relevant by the following abbreviations:

- REQUIRED	**R**	Indicates that the entity is required and must be sent.
- ADVISED	**A**	Indicates that the entity is advised or recommended.
- DEPENDENT	**D**	Indicates that the entity must be sent in certain conditions, as defined by the relevant explanatory note.
- OPTIONAL	**O**	Indicates that the entity is optional and may be sent at the discretion of the user.
- NOT USED	**N**	Indicates that the entity is not used and should be omitted.

2.3 If a composite is flagged as **N, NOT USED**, all data elements within that composite will have blank status indicators assigned to them.

3. Status indicators detailed in the fourth column which directly relate to the code values detailed in the fifth **column** may have two values:

- RESTRICTED	*****	A data element marked with an asterisk (*) in the fourth column indicates that the listed codes in column five are the only codes available for use with this data element, in this segment, in this message.
- OPEN		All data elements where coded representation of data is possible and a restricted set of code values is not indicated are open (no asterisk in fourth column). The available codes are listed in the EANCOM® Data Elements and Code Sets Directory. Code values may be given as examples or there may be a note on the format or type of code to be used.

4. Different colours are used for the code values in the segment details: restricted codes are in red and open codes in blue.

5. Segments Layout

Segment number: 1

UNH	- M	1 - Message header

Function:

To head, identify and specify a message.

Notes:
1. Data element S009/0057 is retained for upward compatibility. The use of S016 and/or S017 is encouraged in preference.
2. The combination of the values carried in data elements 0062 and S009 shall be used to identify uniquely the message within its group (if used) or if not used, within its interchange, for the purpose of acknowledgement.

		EDIFACT	GS1	*	Description
0062	Message reference number	M an..14	**M**		Senders unique message reference. Sequence number of the messages in the interchange. DE 0062 in the UNT will be exactly the same. Sender generated.
S009	MESSAGE IDENTIFIER	M	**M**		
0065	Message type	M an..6	**M**	*	COMDIS = Commercial dispute message
0052	Message version number	M an..3	**M**	*	D = Draft version/UN/EDIFACT Directory
0054	Message release number	M an..3	**M**	*	01B = Release 2001 - B
0051	Controlling agency, coded	M an..3	**M**	*	UN = UN/CEFACT
0057	Association assigned code	C an..6	**R**	*	EAN003 = GS1 version control number (GS1 Permanent Code) Indicates that the message is the EANCOM version 003 of the Commercial Dispute.
0110	Code list directory version number	C an..6	**O**		This data element can be used to identify the codelist agreed by the interchange partners, e.g. EAN001 = EANCOM 2002 S4 codelist released on 01.12.2002 by GS1.
0113	Message type sub-function identification	C an..6	**N**		
0068	Common access reference	C an..35	**N**		
S010	STATUS OF THE TRANSFER	C	**N**		
0070	Sequence of transfers	M n..2			
0073	First and last transfer	C a1			
S016	MESSAGE SUBSET IDENTIFICATION	C	**N**		
0115	Message subset identification	M an..14			
0116	Message subset version number	C an..3			
0118	Message subset release number	C an..3			
0051	Controlling agency, coded	C an..3			
S017	MESSAGE IMPLEMENTATION GUIDELINE IDENTIFICATION	C	**N**		
0121	Message implementation guideline identification	M an..14			
0122	Message implementation guideline version number	C an..3			

5. Segments Layout

Segment number: 1

		EDIFACT	GS1	*	Description
0124	Message implementation guideline release number	C an..3			
0051	Controlling agency, coded	C an..3			
S018	SCENARIO IDENTIFICATION	C	**N**		
0127	Scenario identification	M an..14			
0128	Scenario version number	C an..3			
0130	Scenario release number	C an..3			
0051	Controlling agency, coded	C an..3			

Segment Notes:

This segment is used to head, identify and specify a message.
DE's 0065, 0052, 0054, and 0051: Indicate that the message is a UNSM Commercial Dispute based on the D.
01B directory under the control of the United Nations.

Example:
UNH+ME000001+COMDIS:D:01B:UN:EAN003'

5. Segments Layout

Segment number: 2

BGM - M 1 - Beginning of message					
Function: To indicate the type and function of a message and to transmit the identifying number.					
		EDIFACT	GS1	*	Description
C002	DOCUMENT/MESSAGE NAME	C	**R**		
1001	Document name code	C an..3	**R**	*	67 = Commercial dispute
1131	Code list identification code	C an..17	**N**		
3055	Code list responsible agency code	C an..3	**N**		
1000	Document name	C an..35	**O**		
C106	DOCUMENT/MESSAGE IDENTIFICATION	C	**R**		
1004	Document identifier	C an..35	**R**		Commercial dispute number assigned by the message sender. For global unique identification of documents Global Document Type Identifier (GDTI) is available.
1056	Version identifier	C an..9	**N**		
1060	Revision identifier	C an..6	**N**		
1225	Message function code	C an..3	**R**	*	1 = Cancellation 5 = Replace 6 = Confirmation 9 = Original The message function, coded is a critical data element in this segment. It applies to all data indicated in the message. The following definitions apply for the restricted codes: 1 = Cancellation - This code is used to cancel a previously sent commercial dispute message identified in the RFF segment number 3. Only the mandatory segments in the message need to be re-transmitted and at least two repetitions of the NAD segment identifying the sender and receiver of the message. A new commercial dispute number and date of generation must be assigned to this message. 5 = Replace - This code is used to cancel and replace a previously sent commercial dispute with data transmitted in the current message. The commercial dispute number in this segment will provide a new reference for the actual message replacing a previously transmission. The identification of the message being replaced is carried out in the RFF segment (number 3). 6 = Confirmation - This code is used to re-submit or re-send a copy of a previously sent commercial dispute, for confirmation purposes. The commercial dispute number and date will be the same as those used for the previous message being confirmed (DE 0062 in the UNH segment can be used to identify the last valid version of the message). 9 = Original - An original transmission of a commercial dispute.

5. Segments Layout

4343	Response type code	C an..3	**N**		

5. Segments Layout

Segment number: 2

Segment Notes:

This segment is used to indicate the type and function of a message and to transmit the identifying number.
All references other than the document number DE 1004 are specified in the RFF segment.

Example:
BGM+67+CD78305+9'

5. Segments Layout

Segment number: 3

RFF - C 9 - Reference					
Function: To specify a reference.					
		EDIFACT	GS1	*	Description
C506	REFERENCE	M	**M**		
1153	Reference code qualifier	M an..3	**M**	*	AGG = Dispute number
1154	Reference identifier	C an..70	**R**		
1156	Document line identifier	C an..6	**N**		
4000	Reference version identifier	C an..35	**N**		
1060	Revision identifier	C an..6	**N**		

Segment Notes:

This segment is used only to refer to a previously sent Commercial Dispute message when code values 1 or 5 are used in data element 1225 of the BGM segment.

Example:
RFF+AGG:AX0216'

5. Segments Layout

Segment number: 4

DTM - C 9 - Date/time/period					
Function: To specify date, and/or time, or period.					
		EDIFACT	GS1	*	Description
C507	DATE/TIME/PERIOD	M	**M**		
2005	Date or time or period function code qualifier	M an..3	**M**	*	137 = Document/message date/time 171 = Reference date/time Code value 171 is used to relate to the previous RFF segment.
2380	Date or time or period value	C an..35	**R**		
2379	Date or time or period format code	C an..3	**R**		102 = CCYYMMDD 203 = CCYYMMDDHHMM
Segment Notes: This segment is used to specify the date of the commercial dispute. DE 2005: Identification of the 'Document/message date/time' (code value 137) is mandatory in an EANCOM message. Example: DTM+137:20020110:102'					

5. Segments Layout

Segment number: 5

SG1	- C	99 -	NAD-CTA-COM
NAD	- M	1 -	Name and address

Function:

To specify the name/address and their related function, either by C082 only and/or unstructured by C058 or structured by C080 thru 3207.

		EDIFACT	GS1	*	Description
3035	Party function code qualifier	M an..3	**M**		BY = Buyer PE = Payee PR = Payer SU = Supplier
C082	PARTY IDENTIFICATION DETAILS	C	**A**		For identification of parties it is recommended to use GLN - Format n13.
3039	Party identifier	M an..35	**M**		GLN - Format n13
1131	Code list identification code	C an..17	**N**		
3055	Code list responsible agency code	C an..3	**R**	*	9 = GS1
C058	NAME AND ADDRESS	C	**O**		This composite may only be used to fulfill the requirements of directive 2003/58/EC, article 4.
3124	Name and address description	M an..35	**M**		
3124	Name and address description	C an..35	**O**		
3124	Name and address description	C an..35	**O**		
3124	Name and address description	C an..35	**O**		
3124	Name and address description	C an..35	**O**		
C080	PARTY NAME	C	**D**		
3036	Party name	M an..35	**M**		Party Name in clear text.
3036	Party name	C an..35	**O**		
3036	Party name	C an..35	**O**		
3036	Party name	C an..35	**O**		
3036	Party name	C an..35	**O**		
3045	Party name format code	C an..3	**O**		
C059	STREET	C	**D**		
3042	Street and number or post office box identifier	M an..35	**M**		Building Name/Number and Street
3042	Street and number or post office box identifier	C an..35	**O**		Name and/or P.O. Box.
3042	Street and number or post office box identifier	C an..35	**O**		
3042	Street and number or post office box identifier	C an..35	**O**		
3164	City name	C an..35	**D**		City/Town name, clear text
C819	COUNTRY SUB-ENTITY DETAILS	C	**D**		
3229	Country sub-entity name code	C an..9	**O**		
1131	Code list identification code	C an..17	**O**		
3055	Code list responsible agency	C an..3	**O**		

5. Segments Layout

Segment number: 5

		EDIFACT	GS1	*	Description
	code				
3228	Country sub-entity name	C an..70	**O**		County/State, clear text.
3251	Postal identification code	C an..17	**D**		Postal Code
3207	Country name code	C an..3	**D**		ISO 3166 two alpha code

Segment Notes:

This segment is used to identify the trading parties involved in the commercial dispute. Identification of the sender and receiver of the message is mandatory.

Example:
NAD+BY+5456789000017::9'
NAD+SU+3323456007896::9'

Dependency Notes:
The following composites and data elements are only used when a coded name and address can not be used.
The affected composites and data elements are as follows:
C080 - C059 - 3164 - 3228 - C819 - 3207

5. Segments Layout

Segment number: 6

SG1	- C	99 -	NAD-CTA-COM
CTA	- C	1 -	Contact information

Function:

To identify a person or a department to whom communication should be directed.

		EDIFACT	GS1	*	Description
3139	Contact function code	C an..3	**R**		AD = Accounting contact AP = Accounts payable contact AR = Accounts receivable contact
C056	DEPARTMENT OR EMPLOYEE DETAILS	C	**O**		
3413	Department or employee name code	C an..17	**O**		
3412	Department or employee name	C an..35	**O**		

Segment Notes:

This segment is used to identify contact names within the party specified in the NAD segment.

Example:
CTA+AD+:Y TEALL'

5. Segments Layout

Segment number: 7

SG1	- C	99 -	NAD-CTA-COM
COM	- C	5 -	Communication contact

Function:

To identify a communication number of a department or a person to whom communication should be directed.

		EDIFACT	GS1	*	Description
C076	COMMUNICATION CONTACT	M	**M**		
3148	Communication address identifier	M an..512	**M**		
3155	Communication address code qualifier	M an..3	**M**		EM = Electronic mail TE = Telephone AO = Uniform Resource Location (URL)

Segment Notes:

This segment is used to identify the communications number and method of communications, for the party identified in the NAD segment.

Example:
COM+0032025142663:FX'

5. Segments Layout

Segment number: 8

SG2	- C	9999 -	DOC-DTM-MOA-SG3-SG4-SG5
DOC	- M	1 -	Document/message details

Function:

To identify documents and details directly related to it.

		EDIFACT	GS1	*	Description
C002	DOCUMENT/MESSAGE NAME	M	**M**		
1001	Document name code	C an..3	**R**	*	82 = Metered services invoice 83 = Credit note related to financial adjustments 84 = Debit note related to financial adjustments 380 = Commercial invoice 381 = Credit note - goods and services 383 = Debit note - goods and services 261 = Self billed credit note 262 = Consolidated credit note - goods and services 308 = Delcredere credit note
1131	Code list identification code	C an..17	**N**		
3055	Code list responsible agency code	C an..3	**N**		
1000	Document name	C an..35	**O**		
C503	DOCUMENT/MESSAGE DETAILS	C	**R**		
1004	Document identifier	C an..35	**R**		Disputed document number
1373	Document status code	C an..3	**O**		1 = Accepted 3 = Conditionally accepted 8 = Rejected
1366	Document source description	C an..70	**N**		
3453	Language name code	C an..3	**N**		
1056	Version identifier	C an..9	**N**		
1060	Revision identifier	C an..6	**N**		
3153	Communication medium type code	C an..3	**N**		
1220	Document copies required quantity	C n..2	**N**		
1218	Document originals required quantity	C n..2	**N**		

Segment Notes:

This segment is used to identify the document which is the subject of the commercial dispute. The detail section of the Commercial Dispute is formed by a repeating groups of DOC segments.
The DOC segment provides details of the documents, e.g. an invoice, to which the Commercial Dispute refers.
Individual document line item information is provided in the DLI segment.

Example:
DOC+380+458011'

5. Segments Layout

Segment number: 9

SG2	- C	9999 -	DOC-DTM-MOA-SG3-SG4-SG5
DTM	- C	9 -	Date/time/period

Function:

To specify date, and/or time, or period.

		EDIFACT	GS1	*	Description
C507	DATE/TIME/PERIOD	M	**M**		
2005	Date or time or period function code qualifier	M an..3	**M**	*	137 = Document/message date/time
2380	Date or time or period value	C an..35	**R**		
2379	Date or time or period format code	C an..3	**R**		102 = CCYYMMDD 203 = CCYYMMDDHHMM

Segment Notes:

This segment is used to indicate the date of the document identified in the DOC segment.

Example:
DTM+137:20021215:102'

5. Segments Layout

Segment number: 10

SG2	- C	9999 -	DOC-DTM-MOA-SG3-SG4-SG5
MOA	- C	2 -	Monetary amount

Function:

To specify a monetary amount.

		EDIFACT	GS1	*	Description
C516	MONETARY AMOUNT	M	**M**		
5025	Monetary amount type code qualifier	M an..3	**M**		5 = Adjusted amount 9 = Amount due/amount payable 23 = Charge amount 124 = Tax amount 257 = Amount subject to dispute Code value '9' is to be used to indicate the total amount due for the current document and does not include any deductions related to disputed amounts. Code '257' is to be used to indicate an amount which is being disputed in the total amount due for the current document.
5004	Monetary amount	C n..35	**R**		
6345	Currency identification code	C an..3	**O**		ISO 4217 three alpha code
6343	Currency type code qualifier	C an..3	**N**		
4405	Status description code	C an..3	**N**		

Segment Notes:

This segment is used to provide monetary values related to the document specified in the DOC segment.
Specification of the amount due for the document identified in the DOC segment is mandatory.

Example:
MOA+9:75000'

5. Segments Layout

Segment number: 11

SG2	- C	9999 -	DOC-DTM-MOA-SG3-SG4-SG5
SG3	- C	9 -	AJT-FTX
AJT	- M	1 -	Adjustment details

Function:

To identify the reason for an adjustment.

		EDIFACT	GS1	*	Description
4465	Adjustment reason description code	M an..3	**M**		2 = Below specification goods 3 = Damaged goods 4 = Short delivery 5 = Price query 14 = Wrong delivery 17 = Transport damage 26 = Taxes 32 = Goods not delivered 35 = Goods returned 56 = Incorrect discount 64 = Expecting new terms 10E = Incorrect references (GS1 Temporary Code) 11E = Incorrect charge (GS1 Temporary Code) 12E = Incorrect identification of the buyer (GS1 Temporary Code) 13E = Incorrect product identification (GS1 Temporary Code) ZZZ = Mutually defined
1082	Line item identifier	C an..6	**N**		If specific references or information related to a line item number in a document are required, then the line item number is given in the DLI segment (group 5) and the adjustment given in the AJT segment (group 6).

Segment Notes:

This segment is used to indicate the reason for an adjustment to the current document.
Adjustments can be given for the complete document identified in the DOC segment and additionally, can be given per line item in the AJT segment in the DLI segment group following.

Example:
AJT+5'

5. Segments Layout

Segment number: 12

SG2	- C	9999 -	DOC-DTM-MOA-SG3-SG4-SG5
SG3	- C	9 -	AJT-FTX
FTX	- C	9 -	Free text

Function:

To provide free form or coded text information.

		EDIFACT	GS1	*	Description
4451	Text subject code qualifier	M an..3	**M**		ACE = Dispute ZZZ = Mutually defined
4453	Free text function code	C an..3	**O**		3 = Text for immediate use
C107	TEXT REFERENCE	C	**D**		This composite is only used when trading partners have agreed to use mutually defined code values.
4441	Free text value code	M an..17	**M**		001 = Standard text between trading partners. Code 001 is allocated by the buyer or supplier and agreed for use on a bilateral basis with the trading partners.
1131	Code list identification code	C an..17	**O**		
3055	Code list responsible agency code	C an..3	**D**		91 = Assigned by supplier or supplier's agent 92 = Assigned by buyer or buyer's agent
C108	TEXT LITERAL	C	**D**		This composite is only used if coded text can not be used.
4440	Free text value	M an..512	**M**		
4440	Free text value	C an..512	**O**		
4440	Free text value	C an..512	**O**		
4440	Free text value	C an..512	**O**		
4440	Free text value	C an..512	**O**		
3453	Language name code	C an..3	**D**		ISO 639 two alpha code This data element is only used when non coded free text has been provided in data element C108.
4447	Free text format code	C an..3	**N**		

Segment Notes:

This segment is used to provide any free text information related to the adjustment detailed in the AJT segment. Use of this segment in free form is not recommended since it may inhibit automatic processing of the Commercial Dispute. Coded references to standard texts is an available functionality which enables automatic processing and reduces transmission and processing overheads. Standard texts should be mutually defined among trading partners and can be used to cover legal or other requirements.

Example:
FTX+ACE+3+001::91'
FTX+ACE+++SEE PRICE REDUCTION 4.1.96:CATALOGUE AX-461'

5. Segments Layout

Segment number: 13

SG2	- C	9999 -	DOC-DTM-MOA-SG3-SG4-SG5
SG4	- C	9 -	INP-FTX
INP	- M	1 -	Parties and instruction

Function:

To specify parties to an instruction, the instruction, or both.

		EDIFACT	GS1	*	Description
C849	PARTIES TO INSTRUCTION	C	**R**		
3301	Enacting party identifier	M an..35	**M**		4 = Buyer 5 = Seller
3285	Instruction receiving party identifier	C an..35	**N**		
C522	INSTRUCTION	C	**R**		
4403	Instruction type code qualifier	M an..3	**M**		1 = Action required
4401	Instruction description code	C an..3	**O**	*	AA = Send credit note AD = Advise AG = Send replacement AAE = Send debit note (GS1 Temporary Code)
1131	Code list identification code	C an..17	**O**		
3055	Code list responsible agency code	C an..3	**O**		
4400	Instruction description	C an..35	**N**		
C850	STATUS OF INSTRUCTION	C	**N**		
4405	Status description code	M an..3			
3036	Party name	C an..35			
1229	Action request/notification description code	C an..3	**N**		

Segment Notes:

This segment is used to identify the party who must carry out an instruction from the message sender.

Example:
INP+5+1:AA'

5. Segments Layout

Segment number: 14

SG2	- C	9999 -	DOC-DTM-MOA-SG3-SG4-SG5
SG4	- C	9 -	INP-FTX
FTX	- C	9 -	Free text

Function:

To provide free form or coded text information.

		EDIFACT	GS1	*	Description
4451	Text subject code qualifier	M an..3	**M**		AAG = Party instructions
4453	Free text function code	C an..3	**O**		3 = Text for immediate use
C107	TEXT REFERENCE	C	**D**		This composite is only used when trading partners have agreed to use mutually defined code values.
4441	Free text value code	M an..17	**M**		001 = Standard text between trading partners.
1131	Code list identification code	C an..17	**O**		
3055	Code list responsible agency code	C an..3	**D**		91 = Assigned by supplier or supplier's agent 92 = Assigned by buyer or buyer's agent
C108	TEXT LITERAL	C	**D**		This composite is only used if coded text can not be used.
4440	Free text value	M an..512	**M**		
4440	Free text value	C an..512	**O**		
4440	Free text value	C an..512	**O**		
4440	Free text value	C an..512	**O**		
4440	Free text value	C an..512	**O**		
3453	Language name code	C an..3	**D**		ISO 639 two alpha code This data element is only used when non coded free text has been provided in data element C108.
4447	Free text format code	C an..3	**N**		

Segment Notes:

This segment is used to provide any free text instructions which must be carried out by the party receiving the message.
Use of this segment in free form is not recommended since it may inhibit automatic processing of the Commercial Dispute. Coded references to standard texts is an available functionality which enables automatic processing and reduces transmission and processing overheads. Standard texts should be mutually defined among trading partners and can be used to cover legal or other requirements.

Example:
FTX+AAG++20::92'
Instruction code 20 = Process correction within seven working days to ensure payment to terms.

5. Segments Layout

Segment number: 15

SG2	- C	9999	-	DOC-DTM-MOA-SG3-SG4-SG5
SG5	- C	9999	-	DLI-MOA-SG6
DLI	- M	1	-	Document line identification

Function:

To specify the processing mode of a specific line within a referenced document.

		EDIFACT	GS1	*	Description
1073	Document line action code	M an..3	**M**	*	1 = Included in document/transaction
1082	Line item identifier	M an..6	**M**		

Segment Notes:

This segment is used to identify individual line items within the document identified in the DOC segment.

Example:
DLI+1+7'

5. Segments Layout

Segment number: 16

SG2	- C	9999 -	DOC-DTM-MOA-SG3-SG4-SG5
SG5	- C	9999 -	DLI-MOA-SG6
MOA	- C	2 -	Monetary amount

Function:

To specify a monetary amount.

		EDIFACT	GS1	*	Description
C516	MONETARY AMOUNT	M	**M**		
5025	Monetary amount type code qualifier	M an..3	**M**		5 = Adjusted amount 9 = Amount due/amount payable 23 = Charge amount 52 = Discount amount 124 = Tax amount 257 = Amount subject to dispute Code Value '9' is used to indicate the total amount due for the current document line and does not include any deductions related to disputed amounts. Code value '257' is used to indicate an amount which is being disputed in the total amount due for the current document line.
5004	Monetary amount	C n..35	**R**		
6345	Currency identification code	C an..3	**N**		
6343	Currency type code qualifier	C an..3	**N**		
4405	Status description code	C an..3	**N**		

Segment Notes:

This segment is used to indicate the amounts which are relevant to the line item identified in the DLI segment.

Example:
MOA+9:45000'

5. Segments Layout

Segment number: 17

SG2	- C	9999 -	DOC-DTM-MOA-SG3-SG4-SG5
SG5	- C	9999 -	DLI-MOA-SG6
SG6	- C	9 -	AJT-FTX
AJT	- M	1 -	Adjustment details

Function:

To identify the reason for an adjustment.

		EDIFACT	GS1	*	Description
4465	Adjustment reason description code	M an..3	**M**		2 = Below specification goods 3 = Damaged goods 4 = Short delivery 5 = Price query 14 = Wrong delivery 17 = Transport damage 26 = Taxes 32 = Goods not delivered 35 = Goods returned 56 = Incorrect discount 64 = Expecting new terms 10E = Incorrect references (GS1 Temporary Code) 11E = Incorrect charge (GS1 Temporary Code) 12E = Incorrect identification of the buyer (GS1 Temporary Code) 13E = Incorrect product identification (GS1 Temporary Code) ZZZ = Mutually defined
1082	Line item identifier	C an..6	**N**		

Segment Notes:

This segment is used to indicate the reason for an adjustment to the line identified in the DLI segment. The line number of the line for which adjustments are being detailed was provided in DE 1082 of the DLI segment.

Example:
AJT+5'

5. Segments Layout

Segment number: 18

SG2	- C	9999 -	DOC-DTM-MOA-SG3-SG4-SG5
SG5	- C	9999 -	DLI-MOA-SG6
SG6	- C	9 -	AJT-FTX
FTX	- C	9 -	Free text

Function:

To provide free form or coded text information.

		EDIFACT	GS1	*	Description
4451	Text subject code qualifier	M an..3	**M**		ACE = Dispute ZZZ = Mutually defined
4453	Free text function code	C an..3	**O**		3 = Text for immediate use
C107	TEXT REFERENCE	C	**D**		DE C107: This composite is only used when trading partners have agreed to use mutually defined code values.
4441	Free text value code	M an..17	**M**		001 = Standard text between trading partners Code 001 is allocated by the buyer or supplier and agreed for use on a bilateral basis with the trading partners.
1131	Code list identification code	C an..17	**O**		
3055	Code list responsible agency code	C an..3	**D**		91 = Assigned by supplier or supplier's agent 92 = Assigned by buyer or buyer's agent
C108	TEXT LITERAL	C	**D**		DE C108: This composite is only used if coded text can not be used.
4440	Free text value	M an..512	**M**		
4440	Free text value	C an..512	**O**		
4440	Free text value	C an..512	**O**		
4440	Free text value	C an..512	**O**		
4440	Free text value	C an..512	**O**		
3453	Language name code	C an..3	**D**		ISO 639 two alpha codes DE 3453: This data element is only used when non coded free text has been provided in data element C108.
4447	Free text format code	C an..3	**N**		

Segment Notes:

This segment is used to provide any free text information related to the adjustment detailed in the AJT segment. Use of this segment in free form is not recommended since in most cases it inhibits automatic processing of the extended commercial dispute. Coded references to standard texts is an available functionality which enables automatic processing and reduces transmission and processing overhead. Standard texts should be mutually defined among trading partners and can be used to cover legal and other requirements.

Example:
FTX+ACE+++PLEASE CORRECT:THIRD WEEK WITH ERROR'

5. Segments Layout

Segment number: 19

UNT - M 1 - Message trailer

Function:

To end and check the completeness of a message.

Notes:
1. 0062, the value shall be identical to the value in 0062 in the corresponding UNH segment.

		EDIFACT	GS1	*	Description
0074	Number of segments in a message	M n..10	**M**		The total number of segments in the message is detailed in here.
0062	Message reference number	M an..14	**M**		The message reference number detailed here should equal the one specified in the UNH segment.

Segment Notes:

This segment is a mandatory UN/EDIFACT segment. It must always be the last segment in the message.

Example:
UNT+19+ME000001'

6. Examples

The following is an example of a commercial dispute message between a buyer identified by GLN 5412345111115 and a supplier identified by GLN 5411111123451. The message sent on the 1st of July 2002.

The document disputed is a commercial invoice for a total amount of 75.000 EUR. However the problem was found in the product supplied that was in the line 1 for an amount of 45.000 EUR of the invoice. The reasons for the dispute is that the discount was not made according to the initial agreement and that an instruction for a credit note should be issued on the favour of the buyer.

UNH+ME000001+COMDIS:D:01B:UN:EAN003’	Message header
BGM+67+CD5422+9’	Commercial dispute number CD5422
DTM+137:20020701:102'	Message date 1st July 2002
NAD+BY+5412345111115::9'	Buyer identified by GLN 5412345111115
NAD+SU+5411111123451::9'	Supplier identified by GLN 5411111123451
DOC+380+450811:8’	Commercial invoice document in dispute No450811 was rejected
DTM+137:20011215:102’	Date of document in dispute 15th December 2001
MOA+9:75000’	Amount due for the disputed document 75.000
AJT+56’	The reason for the dispute is an incorrect discount
INP+4+1:AA’	The buyer instructs the seller that a credit note is required
DLI+1+1’	Identify the line item disputed in the document
MOA+257:45000’	The amount disputed is 45.000
AJT+56’	The reason for the dispute is an incorrect discount
UNT+14+ME000001’	Total number of segments in the message equals 14.

Note:
The EDI interchange will include the UNB..UNZ segments and, if applicable, the UNG..UNE segments. (See part 1 section 5.7).